Long-Term Support
World Class Quality

8Mb High Speed with ECC Async SRAM
32Mb High Speed Async SRAM

8Mb High Speed Low Power Asynchronous SRAM with Error Correction Code (ECC)

ISSI's latest Error Correction based 8Mb High Speed Low Power Asynchronous SRAM is in production. This innovative design reinforces ISSI's long-term commitment to SRAMs with the highest quality and performance. This industry's first Error Correction Code (ECC) based Asynchronous SRAM meets high quality requirements in automotive, industrial, military-aerospace, and other applications.

Error Detection and Error Correction

- Independent ECC with hamming code for each byte
- Detect and correct one bit error per each byte
- Better reliability than parity code schemes which can only detect an error but not correct an error
- Backward Compatible: Drop in replacement to current in industry standard devices (without ECC)

Applications: Automotive, Industrial/Medical, Telecom/Networking

Additional ECC Async SRAMs: 1Mb, 2Mb, 4Mb, 16Mb

Key Features

	IS61WV51216EDBLL (I)	IS64WV51216EDBLL (A3)	Comments
Temperature Support	Industrial (-40°C to +85°C)	Automotive (-40°C to +125°C)	
Technology	65nm	65nm	
Standby Current	15mA	35mA	Typical value 2mA
Operating Current	50mA	65mA	Typical value 15 mA
Data Retention Current	15mA	35mA	Typical value 2mA
Packaging	TSOP-II (44 pins) BGA (48 pins)	TSOP-II (44 pins) BGA (48 pins)	Pin compatible w/ industry standard 8Mb Async. SRAM
Speed	10ns	10ns	
Copper Leadframe	Yes	Yes	Improved thermal performance
Lead-free and Leaded	Yes	Yes	RoHS Compliant
Availability	Production	Production	

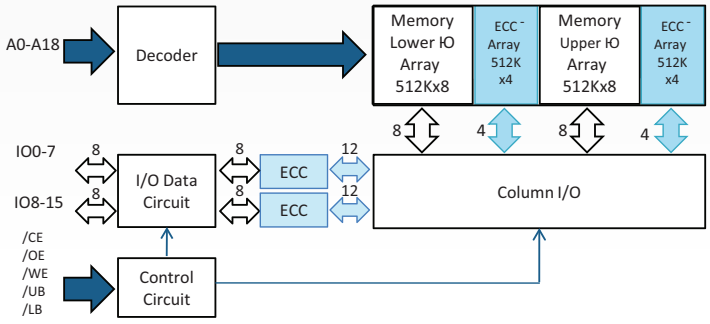

32Mb High Speed Low Power SRAM IS61/64WV204816BLL

ISSI is now sampling a 32Mb High Speed Low Power Asynchronous SRAM, the latest addition to our SRAM portfolio. This innovative design reinforces ISSI's longterm commitment to SRAMs with the highest quality and performance. 32Mb SRAM provides an access time of 10ns at Automotive, A3 temperature range (-40°C to +125°C).

Applications: Automotive, Industrial/Medical, Telecom/Networking

Key Features

	IS61WV204816BLL (I)	IS64WV204816BLL (A3)	Comments
Temperature Support	Industrial (-40°C to +85°C)	Automotive (-40°C to +125°C)	
Technology	40nm	40nm	
Supply Voltage	2.4V ~ 3.6V	2.4V ~ 3.6V	
Operating Current (Max)	100mA	135mA	Typical value 60 mA
Standby Current (Typ)	10mA	10mA	
Packaging	TSOP-I (48 pins) BGA (48 balls)	TSOP-I (48 pins) BGA (48 balls)	Pin compatible w/ 16Mb Async. SRAM
Speed	10ns	12ns	
Copper Leadframe	Yes	Yes	
Lead-free PKG	Yes	Yes	RoHS Compliant
Availability	Sampling Now	Sampling Now	

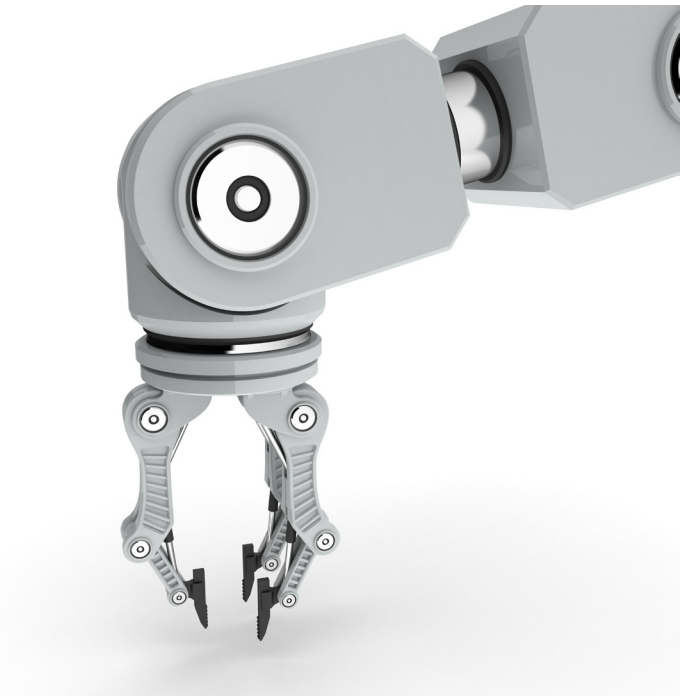

Long-Term Support
World Class Quality

HyperRAM™ 4Mbit Latched SRAM

HyperRAM™ DRAM Based memory with HyperBus™ Interface

Features:

- Hidden Refresh operation
- Very Low Bus Signal Count :
  - 12 pins for 1.8V (with CK,CK#)
  - 11 pins for 3.0V (CK only)
- Max. Frequency :
  - 166MHz at VDD = 1.8V
  - 100MHz at VDD = 3.0V
- Low Power Consumption :
  - Burst Operation Current at 166MHz, 1.8V = 60mA (Max)
  - Standby Current @ 105°C, 1.8V = 300uA (Max)
  - Deep Power Down Current @ 105°C, 1.8V = 10uA (Max)

Package:

- 24-pin BGA

HyperRAM™ Pin-Outs (In evaluation):

- 24-pin (5 x 5 ball array)
- PKG Body Size : 6 mm x 8 mm
- Ball Pitch : 1.0mm

Densities:

- 64Mb (8Mb x 8) , 32Mb (4Mb x8)
- 128Mb (16Mb x8), 256Mb (32Mb x8)

Availability:

- 64Mb, 128Mb
  - Production Now!
- 32Mb, 256Mb
  - Call Factory

Automotive Temperature Grades:

- Automotive, A1 (-40°C to 85°C)
- Automotive, A2 (-40°C to 105°C)

Applications:

- Infotainment
- Advanced Driver Assistance Systems
- Smart Appliance
- Factory Automation
- Medical
- LED Projector
- D-SLR Camera
- Auto-Cluster

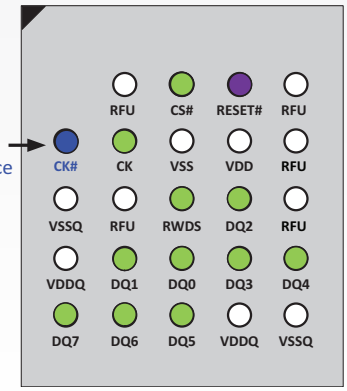

4Mbit Latched SRAM 256Kx16 High speed Asynchronous CMOS stat RAM with Latched Address & ECC

Features:

- High-speed access time: 12ns, 15ns
- Single power supply
  –2.4V-3.6V VDD
- Ultra Low Standby Current with ZZ# pin
  -IZZ = 30µA (typ.)
- Error Detection and Correction per individual 8-bits (byte) with optional ERR1/ERR2 output pin:
  -ERR1 pin indicates 1-bit error detection and correction.
  -ERR2 pin indicates multi-bit error detection
- ALE# pin to latch Address & CS# signals.
- Industrial and Automotive temperature support
- Lead-free available

BGA Pinout:

48-Pin mini BGA (6mm x 8mm) with ZZ# and ERR1/2

	1	2	3	4	5	6
A	LB#	OE#	A0	A1	A2	ZZ#
B	I/O8	UB#	A3	A4	CS#	I/O0
C	I/O9	I/O10	A5	A6	I/O1	I/O2
D	VSS	I/O11	A17	A7	I/O3	VDD
E	VDD	I/O12	ERR1	A16	I/O4	VSS
F	I/O14	I/O13	A14	A15	I/O5	I/O6
G	I/O15	ERR2	A12	A13	WE#	I/O7
H	NC	A8	A9	A10	A11	ALE#