ISSI Expands Family of
LED Current Regulators

ISSI has developed a family of cost effective Constant Current Regulators (CCR) targeted for the automotive and industrial LED lighting market. Key applications for these CCR devices are in lighting applications, where constant LED brightness, high efficiency and low cost are important features. For example automotive lighting applications require that illumination consume minimal power when the motor is not running. Therefore, the main reason for the CCR in automotive applications is to insure uniform LED brightness across the battery voltage range as it varies from stop (6.0V) to start (14.4V) conditions.

Why drive an LED with constant current?

An LED requires a minimum forward voltage (V_F) before it will turn on. This voltage varies with the type of LED, but is typically in the range of 1.5V ~ 4.4V; where Red LED is 2.0V while White, Green or Blue LEDs are about 3.2V. Once the LED's V_F voltage is reached, current through it will increase exponentially with an increase in supply voltage. Therefore, an increase in supply voltage beyond the LED's V_F will result in large current flow through the LED, until either the power supply is unable to supply enough current or the LED is destroyed.

For long term reliability and preventing damage to the LED, it is critical not to violate the LED's absolute maximum current rating. In addition, it is important to note that an LED's luminous intensity and chromaticity (color) are tested and best controlled by driving it with a constant current. Therefore for reliability and maintaining a predictable luminous intensity LED designers must use a constant current source. Below is a discussion of the most relied upon circuits for LED current control, a series resistor or discrete transistors.

Series Resistor

By far the simplest method to limit the LED current is to place a resistor in series with it (Fig. 1). Because there is a linear relationship between voltage and current through the resistor (Ohm's Law), placing a resistor in series with the LED serves to flatten the voltage-to-current relationship. The result is that small changes in LED supply voltage won't cause the current to shoot up radically; however the current will still gradually increase.

For this circuit Ohm's law applies, $I_{LED} = V_R / R_{LED}$; where V_R = LED $V_{Supply} - V_F$. Therefore I_{LED} = (LED $V_{Supply} - V_F$) / R_{LED} which shows that I_{LED} current will track fluctuations in LED V_{Supply} and/or variations in V_F due to LED aging or temperature effects. Another disadvantage is the resistor R_{LED} reduces the voltage by converting electrical energy into heat and therefore a power resistor might be required. Even though this is a simple circuit to implement; it doesn't fully protect the LED from voltage fluctuations, aging or temperature effects.

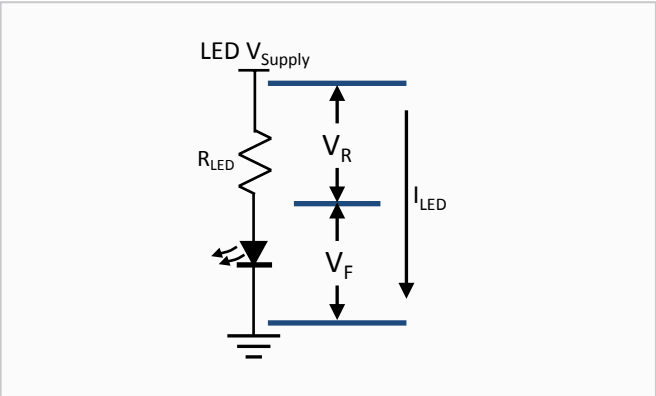

Fig. 1 Series Resistor

Discrete Transistor

Another approach to regulating the LED current is to construct a current source from four discrete components as shown in Fig. 2.

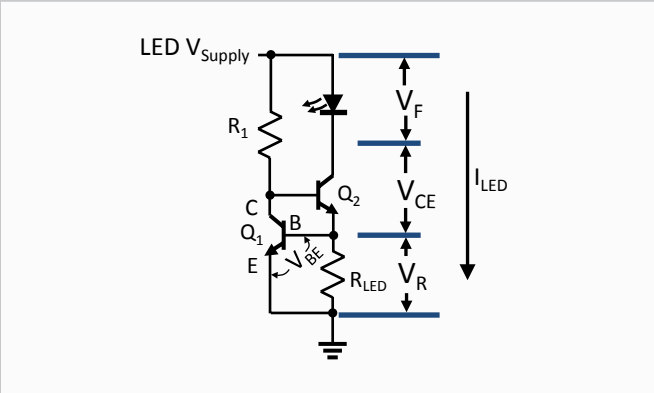

Fig. 2 Discrete Transistor

For more information or questions please contact : ANALOG@ISSI.COM
1623 Buckeye Drive, Milpitas, CA 95035 / 408 969 6600 / www.issi.com

Discrete Transistor Con't

The operation of this discrete transistor circuit is as follows. When LED V_{Supply} is applied Q2 will turn on because it gets its base current through R1. As Q2 turns on, the I_{LED} will begin to flow through the LED, through Q2, and through R_{LED}. As this current flows through R_{LED}, the voltage across R_{LED} (V_R) will increase due to ohm's law, where $V_R = I_{LED} \times R_{LED}$. As V_R increases and reaches Q1's V_{BE} of 0.7V, Q1 will begin to turn on, stealing base current from Q2, which will consequently restrict the I_{LED} current.

This circuit works by limiting the voltage across R_{LED} to no more than Q1's V_{BE} voltage of 0.7V. Once again, Ohm's law ($R_{LED} = V_R / I_{LED}$) is used to calculate R_{LED} for a given current. Since $V_{BE} = V_R = 0.7V$ then $R_{LED} = 0.7V / I_{LED}$ (pick the desired I_{LED} current).

For this circuit any excess voltage will be dropped in Q2 and R_{LED}, instead of just the series resistor as in the previous LED current circuit. Therefore, for its complexity requiring four components, it is not much more efficient. However, the advantage of this circuit is in the $I_{LED} = V_{BE} / R_{LED}$ relationship; I_{LED} current will not be so affected by supply voltage fluctuations nor V_F variation due to LED aging or temperature effects.

Integrated Linear CCR

The ultimate solution to driving LEDs is to use an integrated CCR such as the IS31LT3170 which can provide the exact LED current regardless of variations in supply voltage or temperature (Fig. 3). The IS31LT3170 is an adjustable linear current device with excellent temperature stability. A single resistor (R_{SET}) is all that is required to set the operating current from 10mA to 150mA. The device can operate from an LED V_{Supply} from 2.8V to 42V with minimal voltage headroom (V_{HR}) of 0.6V. Because V_{HR} is so low, it can drive LEDs close to the LED voltage supply since LED $V_{Supply} = V_F + V_{HR}$.

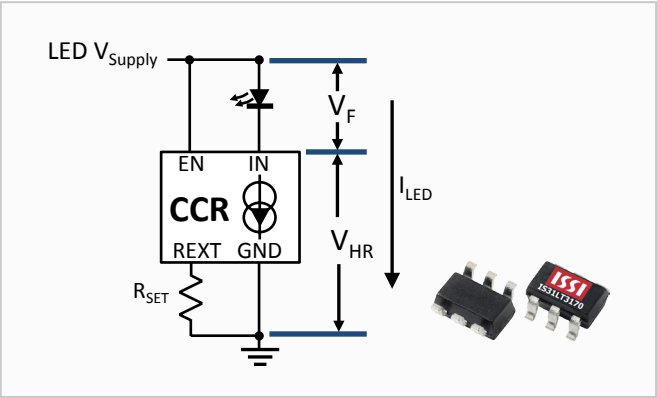

Fig. 3 Integrated CCR (IS31LT3170)

Family of Linear CCRs

ISSI recently introduced a family of linear constant current regulators to cover a wide range of LED applications, Fig. 4. This family of CCR devices simplifies designs by providing a stable current without the additional requirement of input or output capacitors, inductors, transistors or diodes. ISSI's constant current drivers come in small packages to enable flexible component placement which simplifies PCB design while still meeting the LED's constant current requirements.

Part Number	Current Range (mA)	PWM Input	Package
IS31LT3170	10-150	High Side	SOT23
IS31LT3171		Low Side	
IS31LT3172	10-200	High Side	SOP-EP
IS31LT3173		Low Side	

Fig. 4 Table of CCR Devices

Conclusion

LEDs are being proliferated into a variety of automotive and industrial lighting applications. Each application requires specific attention to the LED's luminous intensity and chromaticity output, LED current requirements and thermal management. ISSI's family of CCR devices have been shown to have several distinct advantages for controlling LED current compared to the common methods of using a series resistor or discrete transistors. ISSI's CCR devices not only reduce implementation costs; they also result in compact LED driver designs with long term reliability and optimum optical performance.

Contact:
Aaron Reynoso
ISSI Analog Marketing
areynoso@issi.com